J:\City STANDARDS\2019 Standards Details\Misc. 3 1.dwg, 11/2/2018 10:42:37 AM

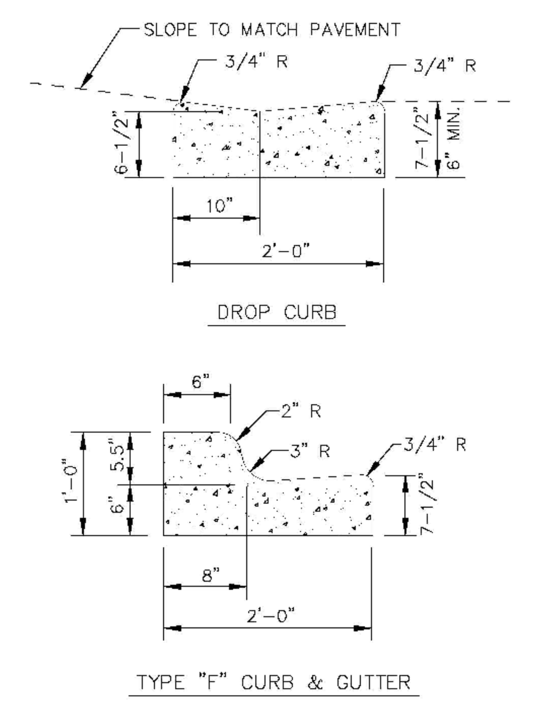

CONCRETE CURB AND GUTTER DETAIL

ENGINEERING STANDARDS 2019

REVISIONS				
BY	DATE	ENGINEERING DIVISION CITY OF POMPANO BEACH	CONCRETE CURB AND GUTTER	
S.S.	07-2016	SCALE: N.T.S.		DATE: JUNE 1996 DWG. NO. 300-1

J:\City STANDARDS\2019 Standards Details\Misc. 3 1.dwg, 11/2/2018 10:43:24 AM

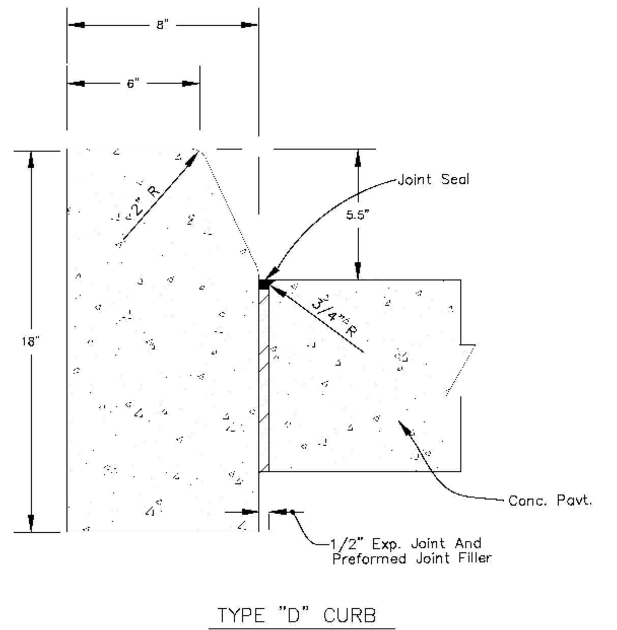

NOTE

FOR USE ADJACENT TO CONCRETE OR FLEXIBLE PAVEMENT, CONCRETE SHOWN. EXPANSION JOINT, PREFORMED JOINT FILLER AND JOINT SEAL ARE REQUIRED BETWEEN CURBS AND CONCRETE PAVEMENT ONLY.

CONCRETE CURB DETAIL

ENGINEERING STANDARDS 2019

REVISIONS				
BY	DATE	ENGINEERING DIVISION CITY OF POMPANO BEACH	CONCRETE CURB	
S.S.	01-2014			
S.S.	08-2015			
S.S.	07-2015	SCALE: N.T.S.		DATE: January 2000 DWG. NO. 300-2

J:\City STANDARDS\2019 Standards Details\Misc. 3 1.dwg, 11/2/2018 10:44:18 AM

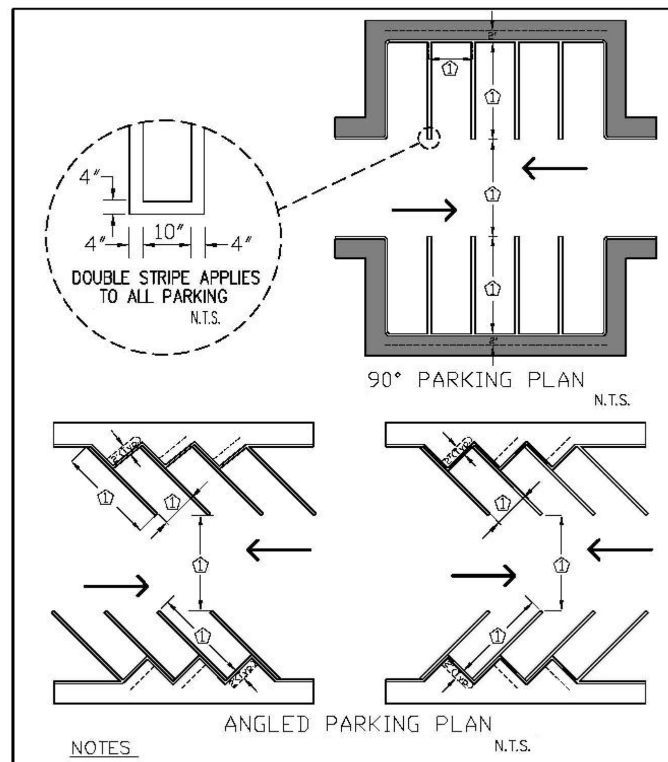

NOTES

1. INDICATED DIMENSION BY LOCAL ZONING ORDINANCE.
2. CURBING APPLIES TO ALL PARKING.
3. EACH SPACE SHALL BE DESIGNATED BY FOUR 4 INCH WIDE VISIBLE STRIPING CONSISTING OF WHITE PAINT OR AS APPROVED BY THE CITY.

ENGINEERING STANDARDS 2019

REVISIONS				
BY	DATE	ENGINEERING DIVISION CITY OF POMPANO BEACH	STANDARD PARKING SPACES	
		SCALE: N.T.S.		DATE: December 2014 DWG. NO. 300-3

J:\City-STANDARDS\2019 Standards Details\Misc. 3-1.dwg, 11/2/2018 10:44:42 AM

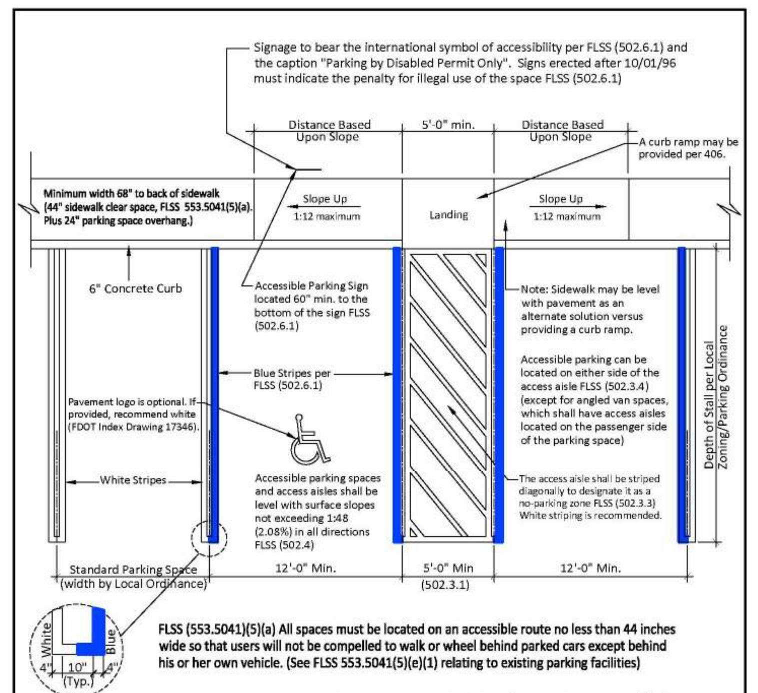

Recommended Accessible Parking Space(s) Design for Double Line Requirements N.T.S.

THIS TECHNICAL ASSISTANCE DOCUMENT IS INTENDED TO PROVIDE INFORMAL GUIDANCE AND DOES NOT CONSTITUTE A LEGAL INTERPRETATION OF STATUTORY OR REGULATORY CRITERIA.

ENGINEERING STANDARDS 2019

REVISIONS				
BY	DATE	ENGINEERING DIVISION CITY OF POMPANO BEACH	ACCESSIBLE PARKING SPACES	
		SCALE: N.T.S.		DATE: December 2014 DWG. NO. 300-4

J:\City-STANDARDS\2019 Standards Details\Misc. 3-1.dwg, 11/2/2018 10:45:07 AM

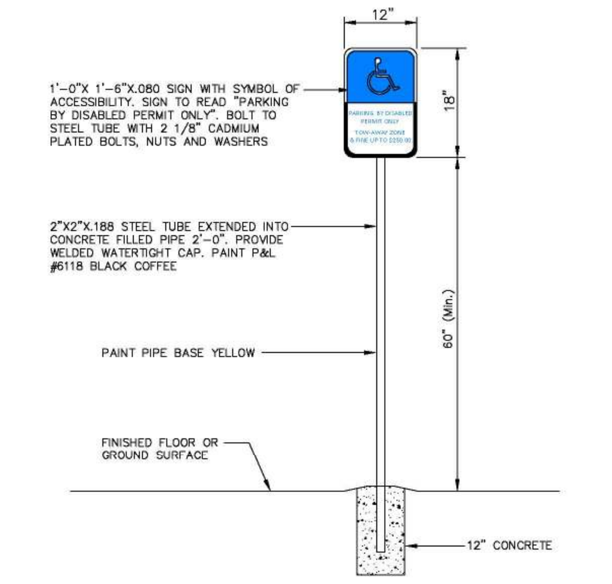

ACCESSIBLE PARKING SPACE SIGN N.T.S.

SIGN NOTE

ACCESSIBLE PARKING SPACES SHALL BE POSTED WITH A FIXED PARKING SIGN NO LESS THAN 60" Min. TO THE BOTTOM OF THE SIGN AND WHICH BEARS THE INTERNATIONAL SYMBOL OF ACCESSIBILITY MEETING THE REQUIREMENTS OF THE STANDARDS AND THE CAPTION "PARKING BY DISABLED PERMIT ONLY." AND MUST INDICATE THE PENALTY FOR ILLEGAL USE OF THE SPACE.

ENGINEERING STANDARDS 2019

REVISIONS				
BY	DATE	ENGINEERING DIVISION CITY OF POMPANO BEACH	ACCESSIBLE SPACE SIGN	
		SCALE: N.T.S.		DATE: December 2014 DWG. NO. 300-5

J:\City STANDARDS\2019 Standards Details\Misc. 3 1.dwg, 11/2/2018 10:45:49 AM

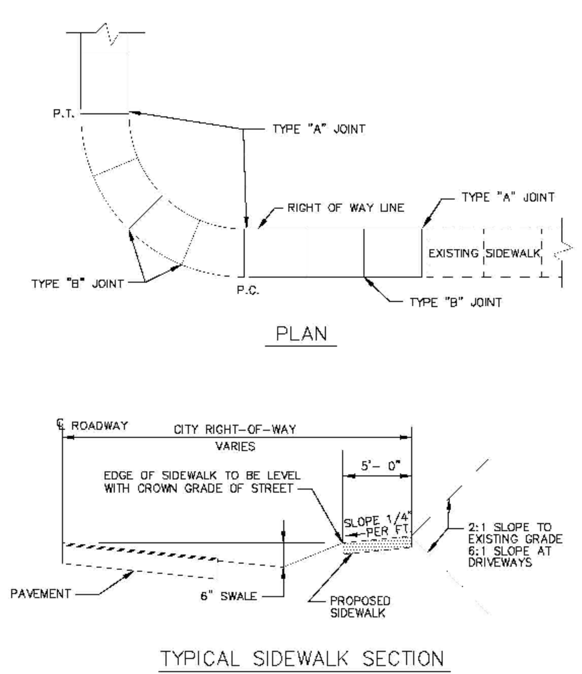

SIDEWALK DETAILS

ENGINEERING STANDARDS 2019

REVISIONS				
BY	DATE	ENGINEERING DIVISION CITY OF POMPANO BEACH	SIDEWALK DETAILS	
		SCALE: N.T.S.		DATE: JUNE 2005 DWG. NO. 301-1

J:\City STANDARDS\2019 Standards Details\Misc. 3 1.dwg, 11/2/2018 10:46:13 AM

TABLE OF SIDEWALK JOINTS	
TYPE	LOCATION
"A"	JOINT SHALL BE PLACED AT P.C. AND P.T. OF CURVES, JUNCTION OF EXISTING SIDEWALKS, EVERY 60' ON NEW SIDEWALKS AND WHERE SIDEWALKS ABUT CONCRETE CURBS, DRIVEWAYS AND SIMILAR STRUCTURES.
"B"	JOINT SHALL BE PLACED 5'-0" CENTER
"C"	JOINT SHALL BE PLACED AT 20' INTERVALS

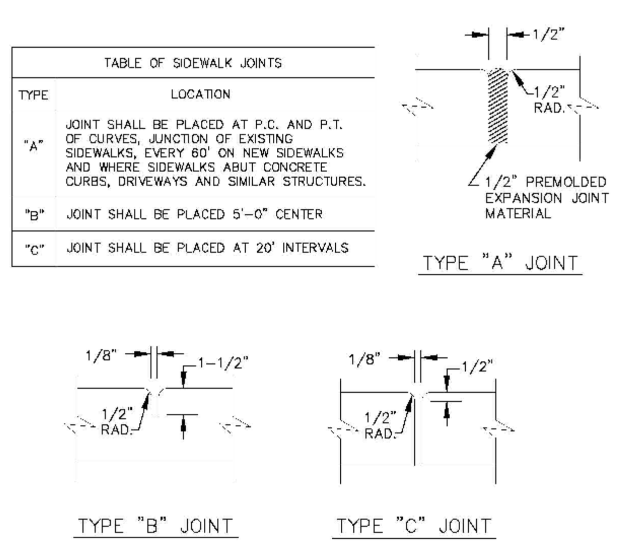

NOTE: SIDEWALK SHALL BE 4" THICK EXCEPT IN DRIVEWAYS WHERE THE THICKNESS SHALL BE 6".

SIDEWALK DETAILS

ENGINEERING STANDARDS 2019

REVISIONS				
BY	DATE	ENGINEERING DIVISION CITY OF POMPANO BEACH	SIDEWALK DETAILS	
		SCALE: N.T.S.		DATE: JUNE 2005 DWG. NO. 301-2

J:\City STANDARDS\2019 Standards Details\Misc. 3 2.dwg, 12/20/2018 2:53:03 PM

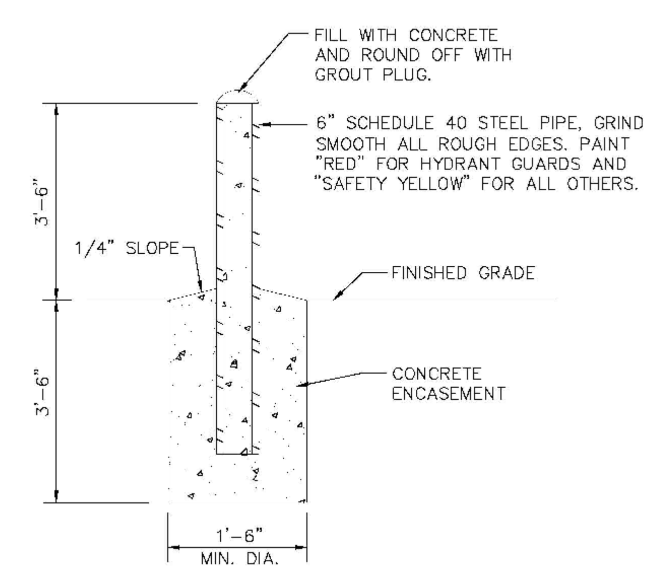

GUARD POST

ENGINEERING STANDARDS 2019

REVISIONS				
BY	DATE	ENGINEERING DIVISION CITY OF POMPANO BEACH	GUARD POST	
		SCALE: N.T.S.		DATE: JUNE 1996 DWG. NO. 304-1

J:\City STANDARDS\2019 Standards Details\Misc. 3 2.dwg, 11/2/2018 11:25:32 AM

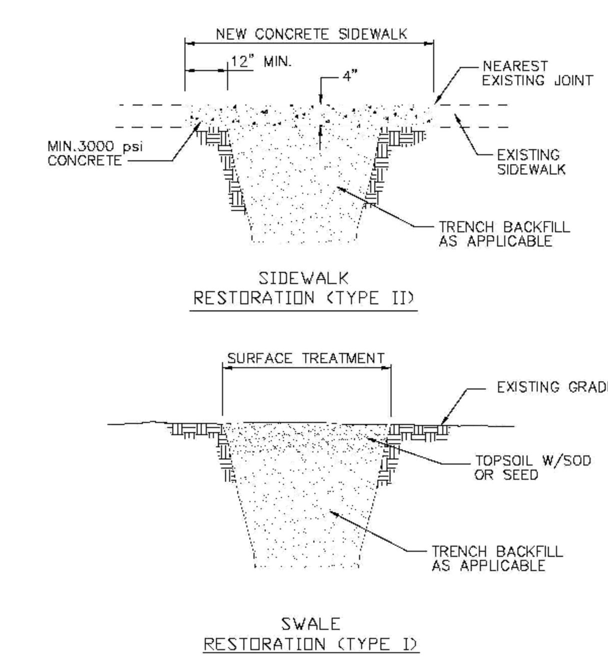

SURFACE RESTORATION

ENGINEERING STANDARDS 2019

REVISIONS				
BY	DATE	ENGINEERING DIVISION CITY OF POMPANO BEACH	SURFACE RESTORATION	
S.S.	5/05/10	SCALE: N.T.S.		DATE: FEB. 1998 DWG. NO. 306-1

J:\City STANDARDS\2019 Standards Details\Misc. 3 2.dwg, 11/2/2018 11:25:59 AM

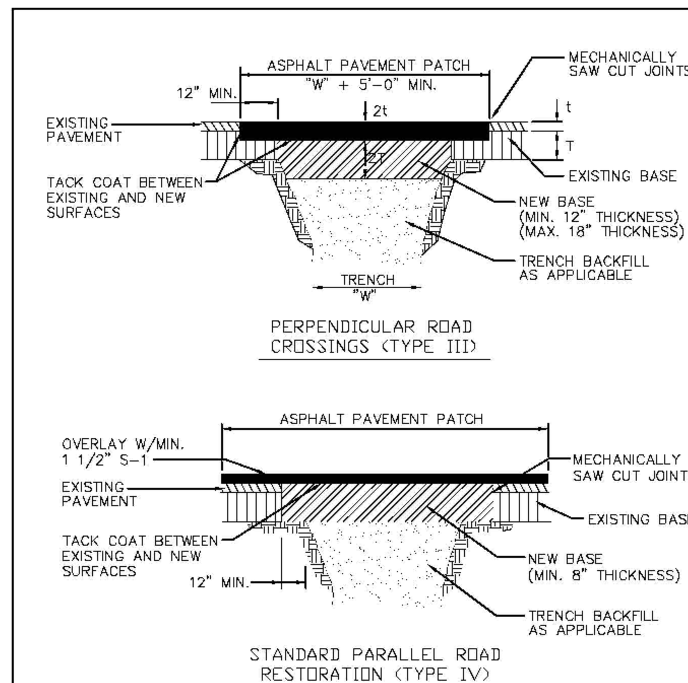

SURFACE RESTORATION

ENGINEERING STANDARDS 2019

REVISIONS				
BY	DATE	ENGINEERING DIVISION CITY OF POMPANO BEACH	SURFACE RESTORATION	
		SCALE: N.T.S.		DATE: FEB. 1998 DWG. NO. 306-2

J:\City STANDARDS\2019 Standards Details\Misc. 3 3.dwg, 11/2/2018 11:45:24 AM

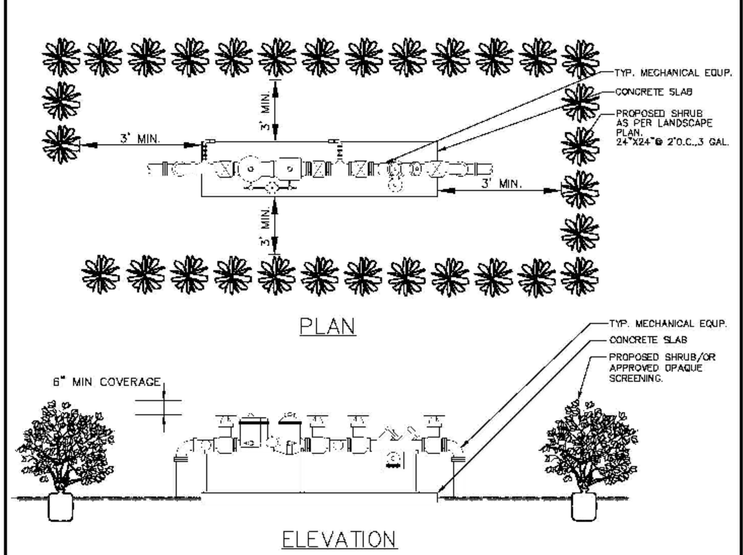

TYPICAL SCREEN FOR UTILITIES

NOTES

PLEASE NOTE THAT AS PER CITY ORDINANCE(S) 50.02(A) (4) AND 100.35(E), STREET TREES SHALL NOT BE PLACED ON TOP OF OR 5' OF EITHER SIDE OF ANY CITY OWNED UTILITY INFRASTRUCTURE. ALSO, PLEASE NOTE THAT NO TREES SHRUBBERY OR OBSTRUCTION SHALL BE PLACED WITHIN A 3' RADIUS OF A CITY OWNED LATERAL CLEANOUT OR WATER & OR REUSE METER.

ENGINEERING STANDARDS 2019

REVISIONS				
BY	DATE	ENGINEERING DIVISION CITY OF POMPANO BEACH	TYPICAL SCREEN FOR UTILITIES	
TCW	APRIL 2010	SCALE: N.T.S.	APPROVED BY:	DATE: APRIL 2010 DWG. NO. 315-1

J:\City STANDARDS\2019 Standards Details\Misc. 3 3.dwg, 11/2/2018 11:45:53 AM

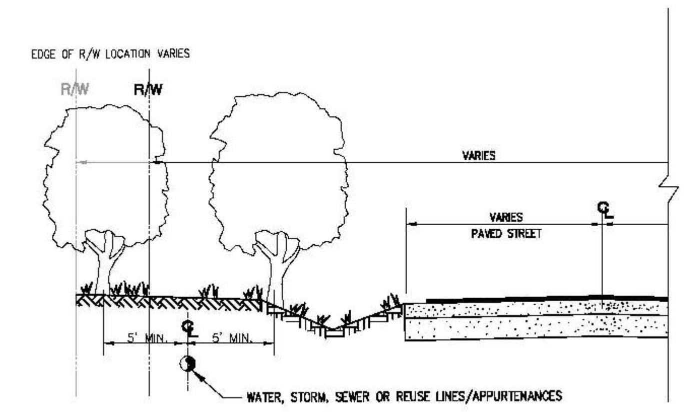

TREE LOCATIONS REQUIRED IN PUBLIC R/W ON UTILITY EASEMENTS

NOTES

PLEASE NOTE THAT AS PER CITY ORDINANCE(S) 50.02(A) (4) AND 100.35(E), STREET TREES SHALL NOT BE PLACED ON TOP OF OR 5' OF EITHER SIDE OF ANY CITY OWNED UTILITY INFRASTRUCTURE. ALSO, PLEASE NOTE THAT NO TREES SHRUBBERY OR OBSTRUCTION SHALL BE PLACED WITHIN A 3' RADIUS OF A CITY OWNED LATERAL CLEANOUT OR WATER & OR REUSE METER.

ENGINEERING STANDARDS 2019

REVISIONS				
BY	DATE	ENGINEERING DIVISION CITY OF POMPANO BEACH	REQUIRED TREE LOCATIONS	
		SCALE: N.T.S.	APPROVED BY:	DATE: 2016 DWG. NO. 316-1

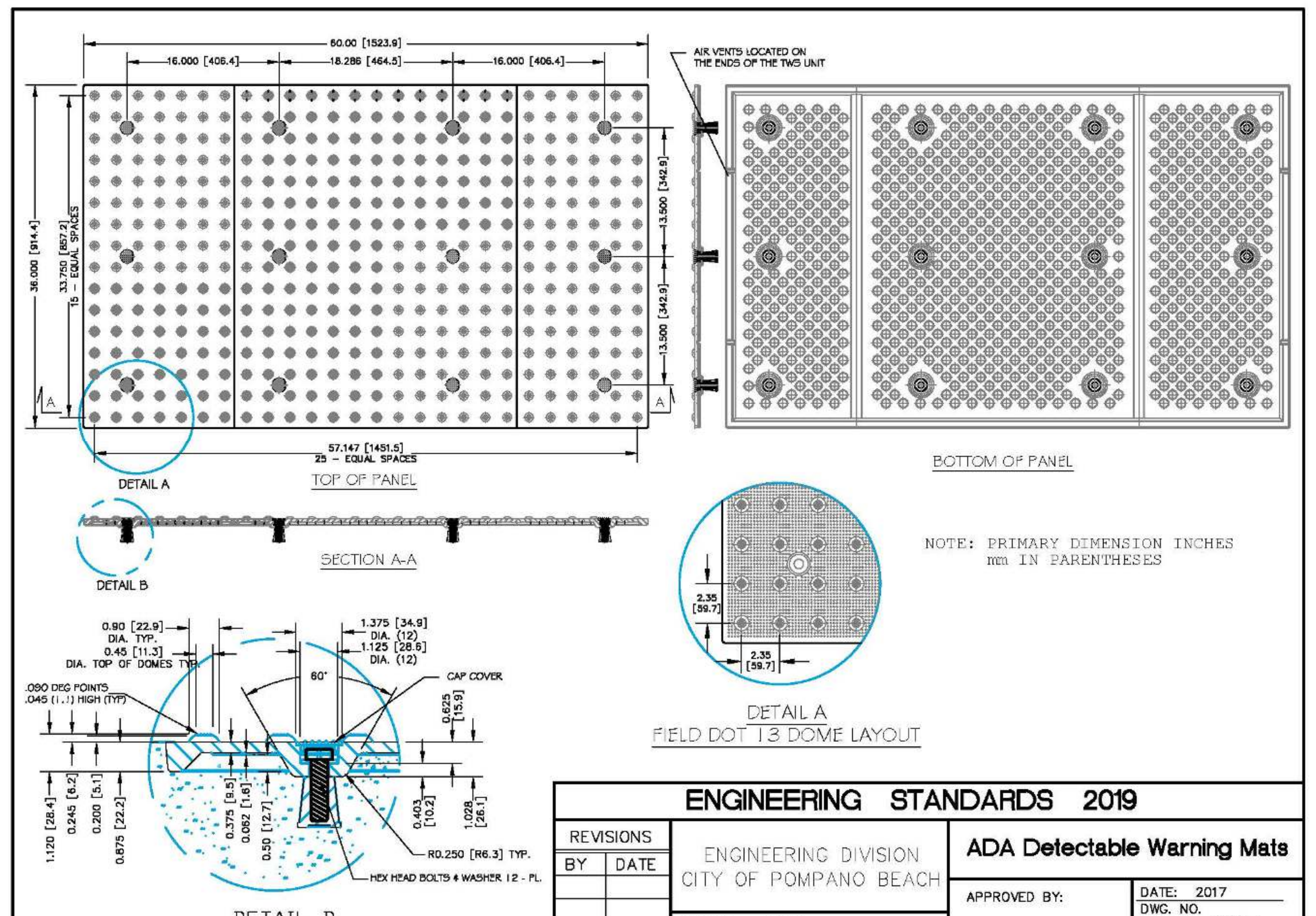

NOTE: PRIMARY DIMENSION INCHES mm IN PARENTHESES

ENGINEERING STANDARDS 2019

REVISIONS				
BY	DATE	ENGINEERING DIVISION CITY OF POMPANO BEACH	ADA Detectable Warning Mats	
		SCALE: N.T.S.	APPROVED BY:	DATE: 2017 DWG. NO. 318-1

REVISIONS:

1.
2.
3.
4.
5.
6.
7.
8.

CLIENT:

D&P Design and Construction LLC
10704 NW 21st Place
Coral Springs, Florida 33071

PROJECT:

554 North Riverside Drive
POMPANO BEACH FLORIDA

TASK:

CONSTRUCTION DETAILS

GGB Engineering, Inc.
CIVIL AND FORENSIC ENGINEERS • LAND PLANNERS • CONSTRUCTION MANAGERS
FLORIDA REGISTRATION No. 8118
2699 Stirling Road, Suite C-202
Fort Lauderdale, Florida 33312
Phone: (954) 986-9899
Fax: (954) 986-6655

DATE:	SCALE:
July 2021	N.T.S.
DESIGNED BY:	DRAWN BY:
G.G.B.	M.M.
PROJECT NO.	
21-0714	
SHEET	
C-002	

Gary G Bloom

Digitally signed by Gary G Bloom
DN: cn=Gary G Bloom c=US o=GGB ENGINEERING ou=A01410D00000175AEF0DBE8000063F4
Reason: I am the author of this document
Location:
Date: 2021-08-31 13:37:14-00

This document has been electronically signed and sealed by Gary G. Bloom, P.E. On the date adjacent to the seal. Printed copies of this document are not considered signed and sealed and the digital signature must be verified on any electronic copies.

DRC
PZ21-12000019
10/20/2021